A High Q Band Pass Filter Implemented from Two Current Conveyors

S. Rana[1] , P. Kumar[2], K. Kumar[3], and K. Pal[4]
[1]D.A.V. Centenary Public School, Hardwar, Uttranchal, India..
[2,3]Department of Physics, D.B.S. College, Dehradun, Uttranchal, India.
[4]Department of Earthquake Engineering, IIT Roorkee, Roorkee, India.
Email: {seema.rana@gmail.com, ranapkumar@yahoo.co.in, kiratfeq@iitr.ernet.in, kushal_kairi@yahoo.co.in}

Abstract

A novel configuration for realizing voltage mode high Q band pass filter based on current conveyors is presented in this paper. The proposed topology is based on and employing two current conveyors, three resistors and two grounded capacitors. The circuit, employs grounded capacitors which suits contemporary IC design techniques. The low sensitivity figures are the additional advantage of the circuit. The circuit has been simulated using personal computer simulation program with integrated circuit emphasis (WINSPICE) and results are found to be in close conformity with theoretical analysis.

1 . Introduction

The second generation current conveyor (CCII) introduced by Sedra and Smith [1], produced number of novel circuits given in the literature [2-6]. It can realise filters and oscillators which have some distinct advantages over earlier circuits using operational amplifier like use of grounded capacitors and with lesser number of active and passive component [7-16]. Current conveyor (CCII) is unity gain (current gain) active element exhibiting high linearity, wide dynamic range and better high frequency performance with there voltage mode counterparts. The commercial availability of the CCII in integrated circuit form attracts considerable attention to the designs incorporating these components. However the advantages of the grounded capacitors in integrated circuits are well known [17].

The important application of this element is in the realisation of filters. One of the filter known as band pass filter is used to select a band of frequencies. In general the transfer of band pass filter is given as:

$$\frac{V_0}{V_i} = \frac{a_0 s}{a_1 + b_1 s + b_2 s^2} \quad \text{……..(1)}$$

where a_0, a_1,b_1 and b_2 are constants.
The quality factor Q of the band pass filter is governed by the term b_1. it has high Q if b_1 approaches zero but practically it is not possible.

The purpose of this paper is to present a high Q band pass filter whose active and passive sensitivities are low. The proposed filter circuit employs two second generation current conveyors, three resistors and two grounded capacitors. The present circuit is also performes like a low pass filter at low Q. The present circuit realisation with grounded capacitors makes it suitable for IC implementation.

2 . Circuit Description

The configuration of the proposed band pass filter in general form is shown in fig.1.

The analysis of the circuit in fig.1. yields the voltage mode band pass filter transfer function given by:

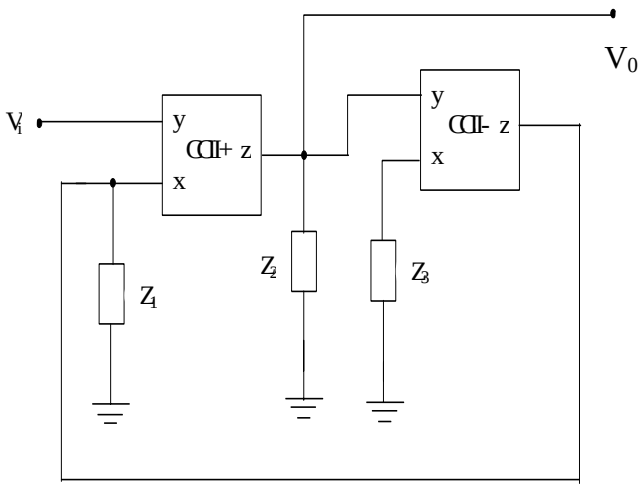

Fig.1. A general circuit of the proposed band pass filter.

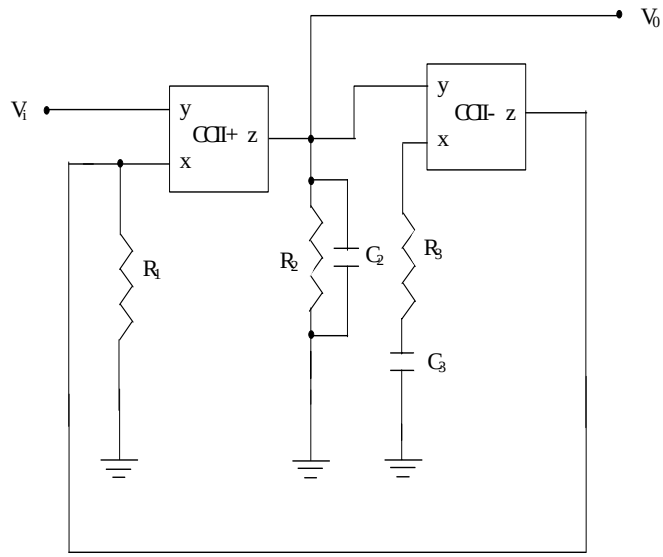

Fig.2. Actual circuit of the proposed band pass filter.

$$\frac{V_0}{V_i} = \frac{\frac{Z_2}{Z_1}}{1-\frac{Z_2}{Z_3}} \qquad \text{.....(2)}$$

put $Z_1 = R_1$, $Z_2 = \dfrac{R_2}{1+sC_2R_2}$

and $Z_3 = \dfrac{1+sC_3R_3}{sC_3}$

the eqn. (2) becomes as

$$\frac{V_0}{V_i} = \frac{R_2}{R_1}\left[\frac{1+sC_3R_3}{1+s^2C_2C_3R_2R_3+s\left(C_2R_2+C_3R_3-C_3R_2\right)}\right] \qquad \text{.....(3)}$$

put $R_2 = R$, $R_3 = KR$, $C_2 = C$ and $C_3 = 2C$

then eqn. (3) becomes as

$$\frac{V_0}{V_i} = \frac{R}{R_1}\left[\frac{1+2KsCR}{1+2Ks^2C^2R^2+sCR\left(2K-1\right)}\right] \qquad \text{.....(4)}$$

The actual circuit of the proposed band pass filter is shown in fig.2.

For high Q, $\dfrac{2K-1}{2K} \geq 0$

or $K \geq \dfrac{1}{2}$.

Thus for high Q band pass filter K should be positive or greater than $\dfrac{1}{2}$ .It is clearly seen that Q approaches infinity as K approaches $\dfrac{1}{2}$.

The parameters ω_0, ω_0 /Q and Q are given by:

$$\omega_0 = \frac{1}{\sqrt{C_2C_3R_2R_3}} \qquad \text{.....(5)}$$

$$\frac{\omega_0}{Q} = \frac{C_2R_2+C_3R_3-C_3R_2}{C_2C_3R_2R_3} \qquad \text{.....(6)}$$

$$Q = \frac{\sqrt{C_2C_3R_2R_3}}{C_2R_2+C_3R_3-C_3R_2} \qquad \text{.....(7)}$$

2. 1 Sensitivity

The sensitivity figures are given by:

$$S^{\omega_0}_{C_2C_3} = -\frac{1}{2}$$

$$S^{\omega_0}_{R_1R_2R_3} = -\frac{1}{2}$$

which shows that the passive elements have low sensitivity.

3 . Experimental Results

The voltage transfer function for different values of K in eqn. (4) are

$$\frac{V_0}{V_i} = \frac{R}{R_1}\left[\frac{1+1.2sCR}{1+1.2s^2C^2R^2+.2sCR}\right], \quad \text{for } K = 0.6$$

$$\frac{V_0}{V_i} = \frac{R}{R_1}\left[\frac{1+1.1sCR}{1+1.1s^2C^2R^2+.1sCR}\right], \quad \text{for } K = 0.55$$

$$\frac{V_0}{V_i} = \frac{R}{R_1}\left[\frac{1+1.14sCR}{1+1.14s^2C^2R^2+.14sCR}\right], \quad \text{for } K = 0.57$$

$$\frac{V_0}{V_i} = \frac{R}{R_1}\left[\frac{1+1.16sCR}{1+1.16s^2C^2R^2+.16sCR}\right], \quad \text{for} K = 0.58$$

$$\frac{V_0}{V_i} = \frac{R}{R_1}\left[\frac{1+1.18sCR}{1+1.18s^2C^2R^2+.18sCR}\right], \quad \text{for } K = 0.59$$

To verify the theoretical results the band pass filter circuit (fig.2) has been simulated using spice program for following component values

$R_2 = R = 10\ K\Omega$,

$R_3 = KR$

where K=0.6, 0.55, 0.57, 0.58, 0.59.

$C_2 = .01\mu F$, and $C_3 = .02\mu F$

The current conveyor model of IC AD844 was used in the experiment.

The results of the study for different values of K of the proposed band pass filter are shown in graph (fig.3).

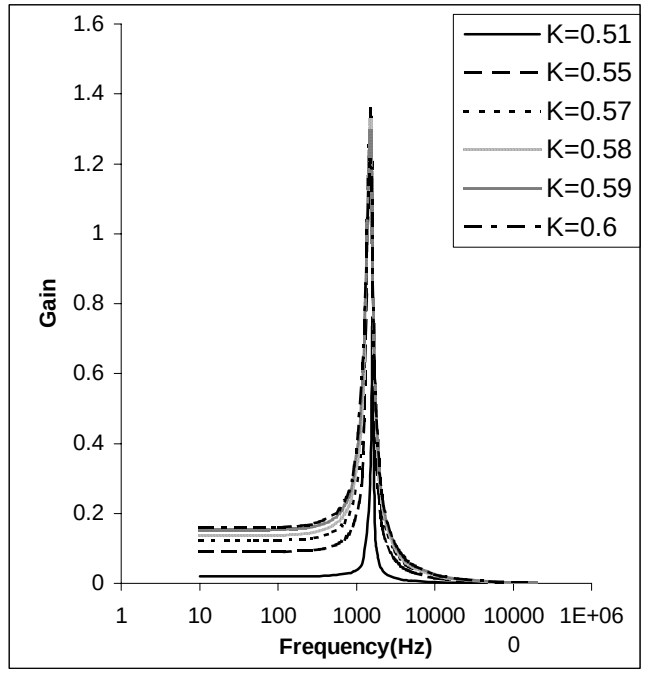

Fig.3. Gain Vs frequency plot of the proposed band pass filter.

4 . Conclusion

A high Q band pass filter is presented in this paper. The circuit uses two current conveyors, three resistors and two grounded capacitors. the present circuit realisation with grounded capacitors makes it suitable for IC implementation. The circuit has low sensitivity performance contributing to its reliability.

References

[1] Sedra A. and Smith K.C., "A second generation current conveyor and its applications" IEEE Trans., vol.17, pp.132-134, 1970.

[2] Wilson B.,"Recent developments in current conveyors and current mode circuits" IEE Proc., vol.137, pp.63-77, 1990.

[3] Chang C.M. and Chen P.C.,"Realisation of current mode transfer function using second generation current conveyor" Int. J. Electronics, vol.71, pp.809-815,1991a.
[4] Aronhime P., " Transfer function synthesis using a current conveyor" Ibid, vol.21, pp.312-313,1974.
[5] Smith K.C. and Sedra A., "The current conveyor a new building block" Proc. IEEE, vol.56, pp.1368-1369, 1968.
[6] Wadsworth D.C.," Accurate current conveyor integrated circuit" Electronics Lett., vol.25, pp.1251-1252, 1989.
[7] Soliman A. M., "Inductorless of an all-pass transfer function using the current conveyor" IEEE Trans., vol.20. pp.80-81, 1973.
[8] Nandi R., "Wien bridge oscillator using current conveyor" Proc. IEEE, vol.65, pp.1608-1609, 1977.
[9] Chang C.M., "Current mode all-pass, notch and band pass filter using single CCII" Electronics Lett.,vol.27, pp.1812-1813, 1991.
[10] Fabre A.,and Alami M., "Universal current mode biquade implemented from second generation current conveyors" IEEE Trans.on Cir. & Sys. vol.42, pp.383-385,1995.
[11] Singh V.K., and Senani R., "New multifunctional active filter configuration employing current conveyors" Electronics Lett., vol.26, pp.1864-1866.
[12] Pal K., "Realisation of current conveyor all-pass network" Int. J. Electronics, vol.50, no.2, pp.165-168, 1981.
[13] Chang C.M., "Current mode low pass, band pass and high pass biquads using two CCII" Electronics Lett., vol.29, pp.2020-2021, 1993.
[14] Fabre A., Alami M., "Intesitive current mode band pass filter implemented from two current conveyors" Electronics Lett., vol.27, no.11, pp.897-898, 1991.
[15] Fabre A. Saaid O. Wiest F. and Boucheron, C., "Current controlled bband pass filter based on translinear current conveyors" Electronics Lett., vol.31, no.20, pp.1727-1728, 1995.
[16] Pal K. and Singh R., "Inductorless current conveyor all-pass filter using grounded capacitors" Electronics Lett. IEE Publication, vol.18, no.1, pp.47, 1982.
[17] Bhusan M., and Newcomb, R.W., "Grounding of capacitors in integrated circuits" Electronics Lett., vol.3, pp.148-149,1967.